1. General Description

A: COMPONENT

1. FRONT SEAT

- Driver's seat

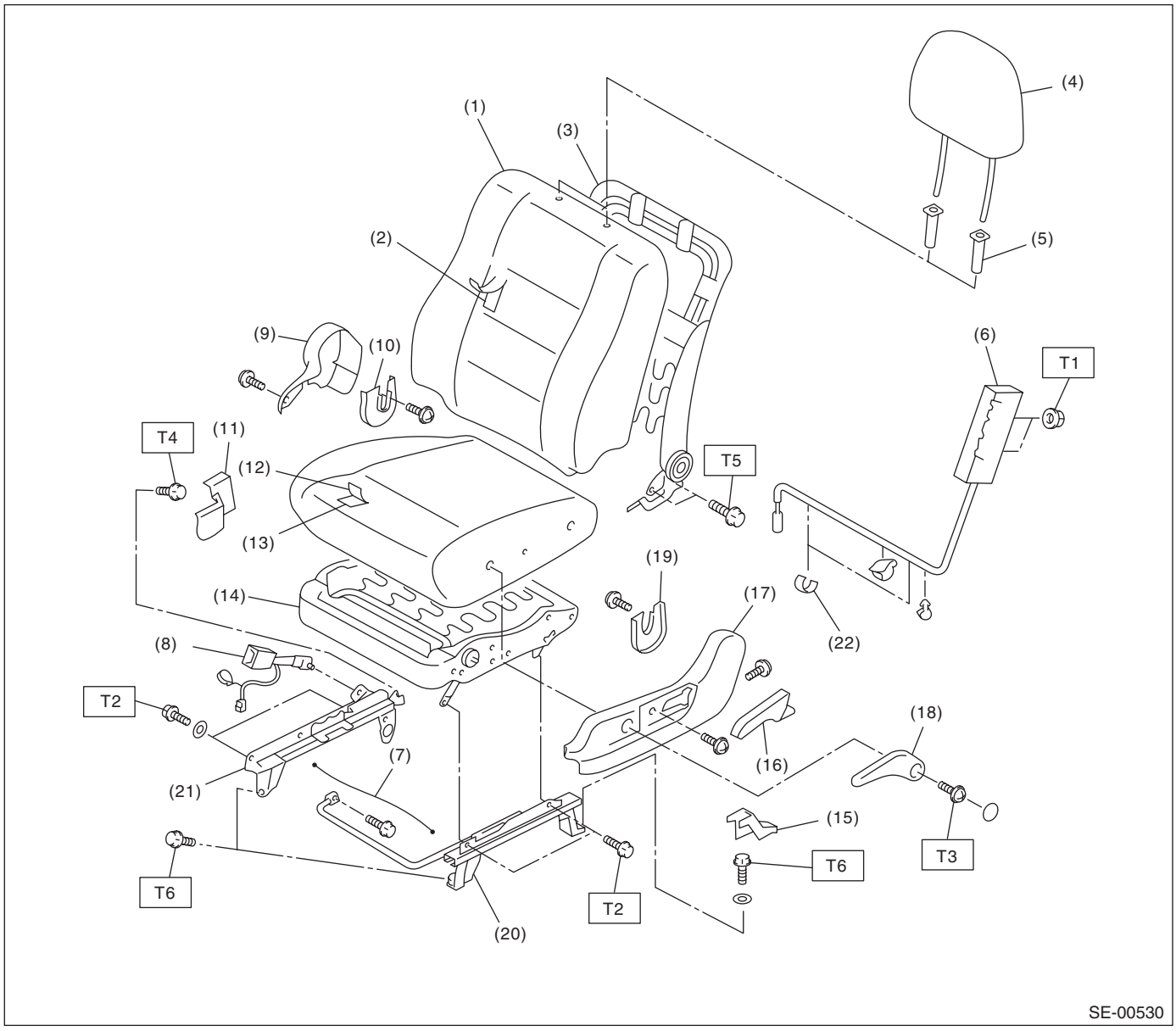

(1)	Backrest cover	(11)	Bolt cover inner	(21)	Inner slide rail
(2)	Backrest pad	(12)	Seat cushion cover	(22)	Tape
(3)	Backrest frame ASSY	(13)	Seat cushion pad		
(4)	Headrest ASSY	(14)	Seat cushion frame ASSY		
(5)	Headrest lock bushing	(15)	Bolt cover outer		
(6)	Side airbag module	(16)	Reclining lever		
(7)	Connecting wire	(17)	Seat hinge outer cover		
(8)	Inner seat belt ASSY	(18)	Lifter lever		
(9)	Seat hinge inner cover	(19)	Seat hinge inner cover RH		
(10)	Seat hinge inner cover LH	(20)	Outer slide rail		

Tightening torque:N·m (kgf-m, ft-lb)
T1: 7.5 (0.76, 5.5)
T2: 10 (1.02, 7.38)
T3: 22 (2.24, 16.2)
T4: 30 (3.06, 22.1)
T5: 52 (5.30, 38.4)
T6: 53 (5.40, 39.1)

- Passenger's seat

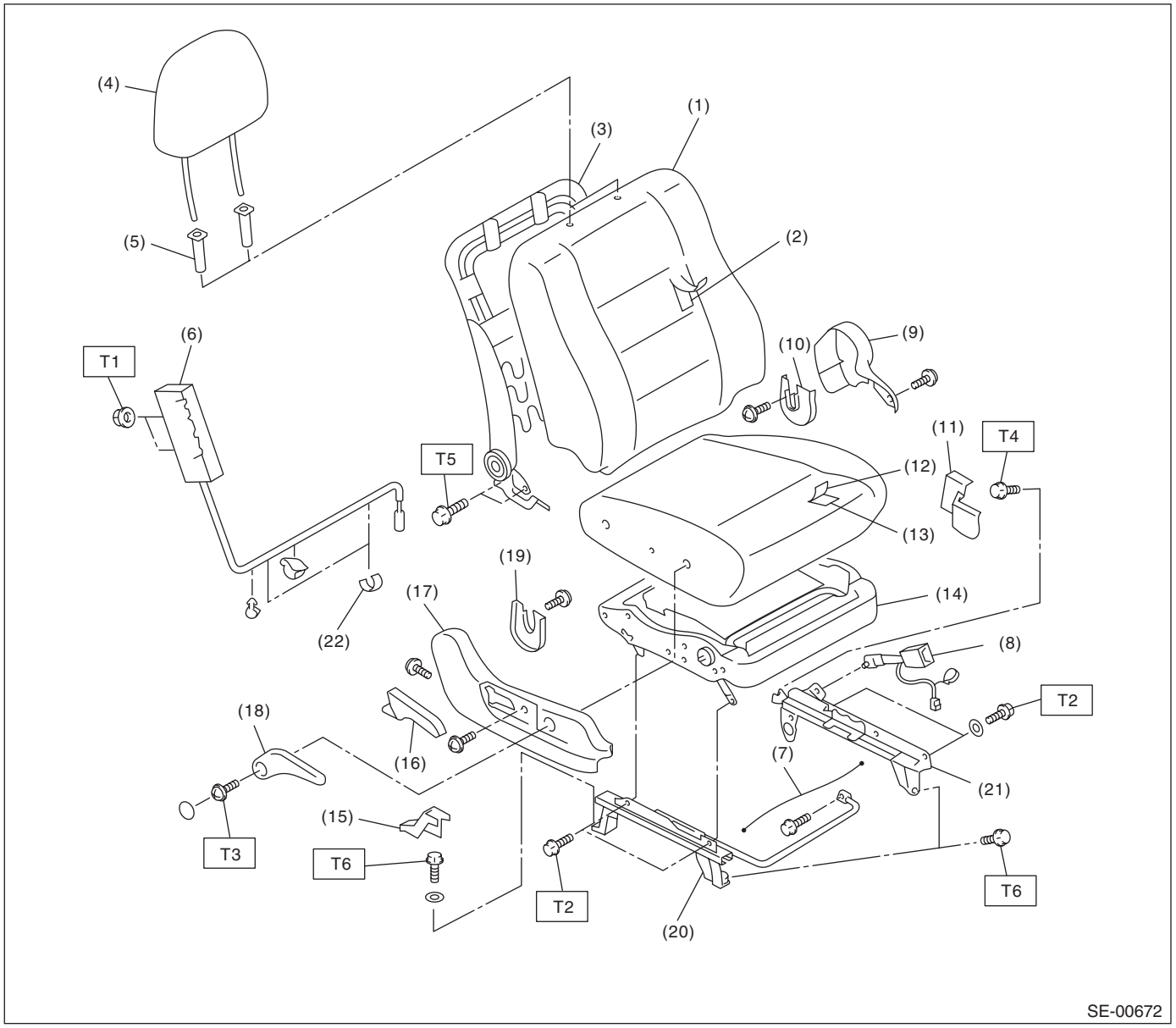

(1)	Backrest cover	(11)	Bolt cover inner	(21)	Inner slide rail
(2)	Backrest pad	(12)	Seat cushion cover	(22)	Tape
(3)	Backrest frame ASSY	(13)	Seat cushion pad		
(4)	Headrest ASSY	(14)	Seat cushion frame ASSY		
(5)	Headrest lock bushing	(15)	Bolt cover outer		
(6)	Side airbag module	(16)	Reclining lever		
(7)	Connecting wire	(17)	Seat hinge outer cover		
(8)	Inner seat belt ASSY	(18)	Lifter lever		
(9)	Seat hinge inner cover	(19)	Seat hinge inner cover RH		
(10)	Seat hinge inner cover LH	(20)	Outer slide rail		

Tightening torque:N·m (kgf-m, ft-lb)

T1: 7.5 (0.76, 5.5)
T2: 10 (1.02, 7.38)
T3: 22 (2.24, 16.2)
T4: 30 (3.06, 22.1)
T5: 52 (5.30, 38.4)
T6: 53 (5.40, 39.1)

2. REAR SEAT (SEDAN MODEL)

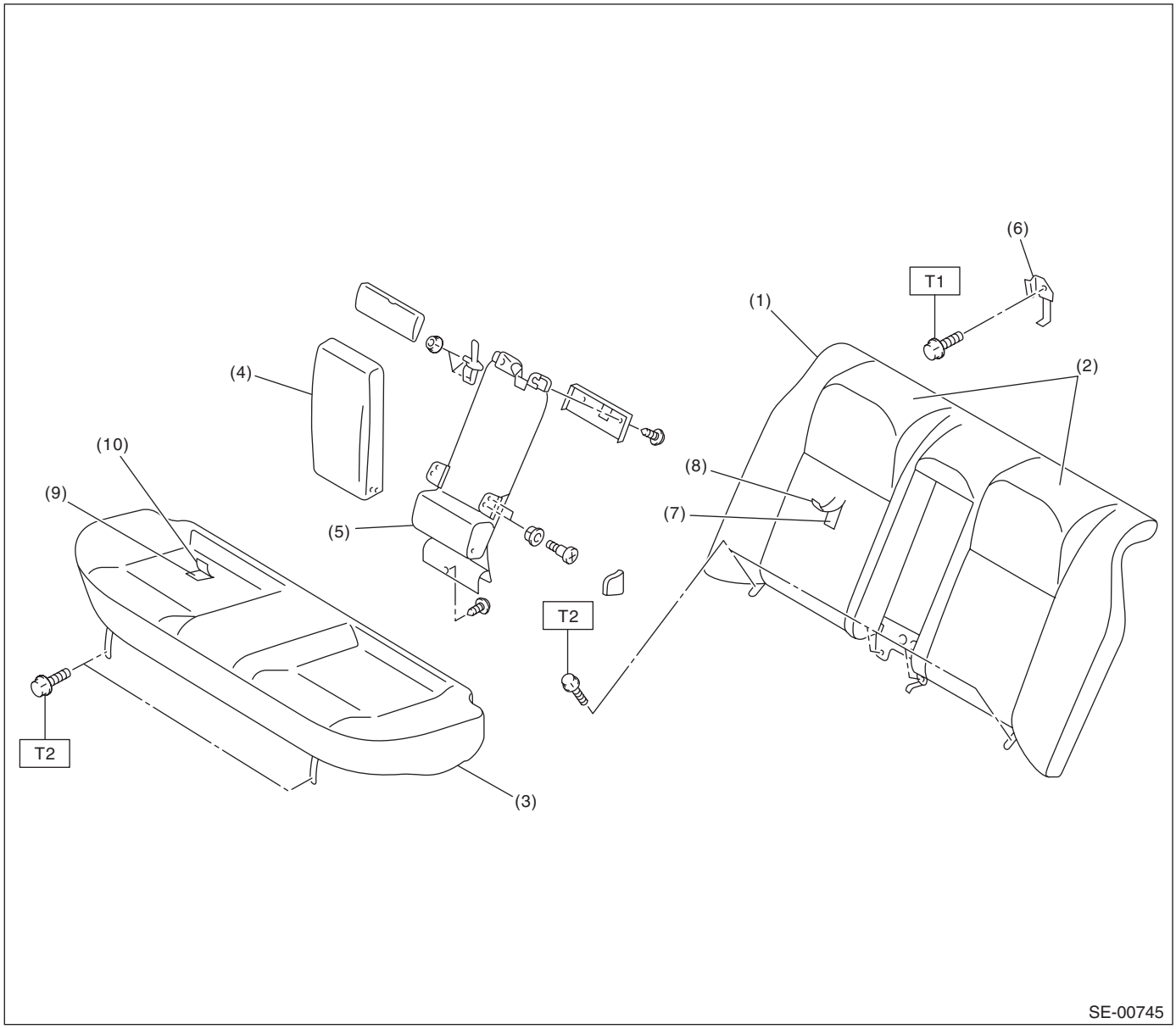

(1)	Backrest	(6)	Hook
(2)	Headrest	(7)	Backrest pad ASSY
(3)	Cushion	(8)	Backrest cover ASSY
(4)	Armrest	(9)	Rear pad & cushion frame ASSY
(5)	Center through frame	(10)	Rear cushion cover

Tightening torque:N·m (kgf-m, ft-lb)
T1: 10 (1.02, 7.38)
T2: 24.5 (2.5, 18.1)

3. REAR SEAT (WAGON MODEL)

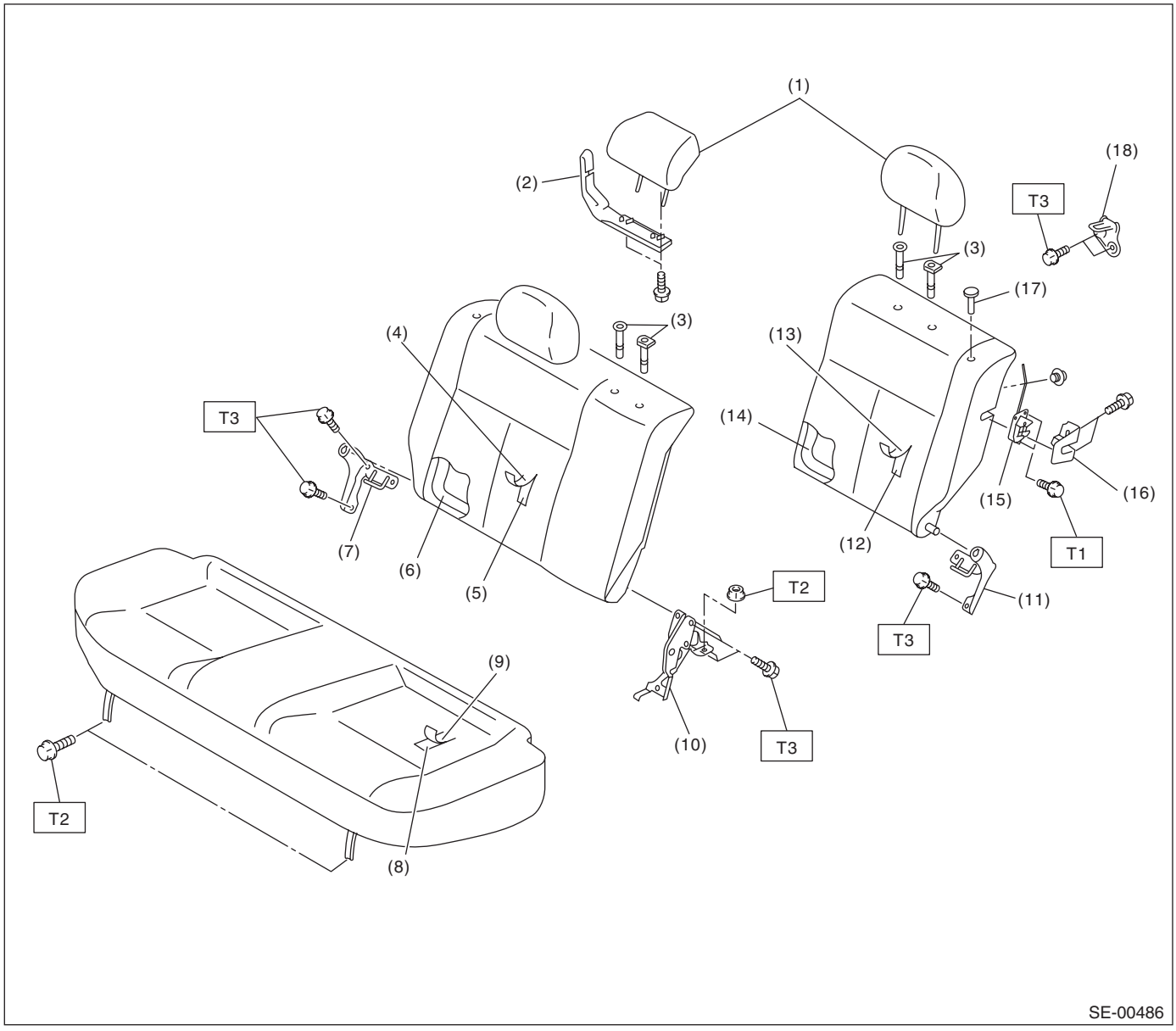

(1)	Headrest	(9)	Seat cushion cover	(17)	Backrest knob
(2)	Seat belt guide	(10)	Hinge ASSY center	(18)	Striker
(3)	Headrest bushing	(11)	Hinge ASSY LH		
(4)	Backrest cover RH	(12)	Backrest pad LH		
(5)	Backrest pad RH	(13)	Backrest cover LH		
(6)	Backrest frame RH	(14)	Backrest frame LH		
(7)	Hinge ASSY RH	(15)	Seat back latch		
(8)	Seat cushion pad	(16)	Seat backrest latch cover		

Tightening torque:N·m (kgf-m, ft-lb)

T1: 17.7 (1.81, 13.1)

T2: 24.5 (2.5, 18.1)

T3: 33 (3.3, 24.6)

B: CAUTION

• If the seat cushion cover is removed or replaced, make sure to perform passenger detection system adjustment after installing the seat to the vehicle. <Ref. to OD(diag)-18, SYSTEM CALIBRATION (REZEROING), OPERATION, Subaru Select Monitor.>
Failure to do so may cause improper operation of the occupant detection system.
• The passenger detection system (passenger seat only) control unit and the passenger detection sensor are fixed to the seat cushion frame. Never remove the passenger detection control unit or the pressure sensor from the seat cushion frame.
• Do not replace the seat cushion pad by itself. Always replace the seat cushion pad and frame assembly as a set. The seat cushion pad and cushion frame are adjusted as a set at the time of manufacture. If cushion pads and cushion frames are combined from those of other vehicles or other sets, the passenger detection system may not operate properly.
• If the seat cushion cover is removed, make sure to replace the wire on the seat cushion side with a new wire. (Passenger's seat)
• Do not remove the seat position sensor from the slide rail. (Driver's seat)
• When removing the front seat, follow cautions given in the airbag section. <Ref. to AB-3, CAUTION, General Description.>

C: PREPARATION TOOL

1. GENERAL TOOL

TOOL NAME	REMARKS
Long nose plier	Used for removing the hog ring.
Hog ring pliers	Used for installing the hog ring.